HKM Messtechnik

Compression load cell

DD 2.X, DD 3.X

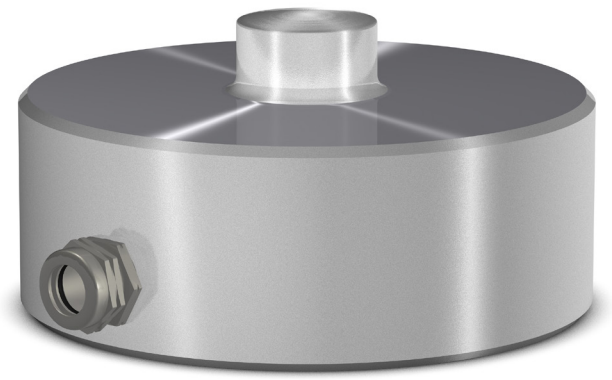

For compression loads
Nominal loads from 500 kg to 20 t
Metallic enclosure (IP 67)

Container scales
Platform scales
Metering scales
Load and force measurement

Designed, developed and made in Germany

These compression load cells are intended for measuring static and dynamic compressive forces. Their metallic housings enable use of these sensors where they are exposed to aggressive environments.
Loads must always be applied concentric with the load cell. To secure a load cell in the load path, there are four tapped holes in the base. Mounting plates for these compression load cells are available as accessories. They employ dowels to ensure that loads are correctly applied in the centre of a load cell. However, this type of installation offers no protection against lifting.

Measuring amplifiers can be integrated in all compression load cells, ensuring that a broad bandwidth of output signals are at your disposal. Transducers are supplied with a cable as a standard feature or, alternatively, can be connected with an M12x1 plug connector.

Technical data

Type		DD 2.0	DD 2.1	DD 2.2	DD 2.3	DD 2.4	DD 3.0	DD 3.1
Nominal load		500 kg	1000 kg	2000 kg	4000 kg	6000 kg	10 t	20 t
Dimensions [mm]	D1	Ø 94					Ø 114	
	H1	35.5					47.5	
	D2	Ø 23					Ø 23	
	H2	48					60	
	D3	Ø 80					Ø 90	
	D4	Ø 55					Ø 55	
Mounting thread M		M 5 – 12 deep					M 12 – 16 deep	
Material		nickel-plated steel						
Self-weight [kg] (without cable)		1.6					3.3	
Maximum working load*		1.1 x nominal load						
Limit load*		1.5 x nominal load						
Breaking load*		> 3 x nominal load						
Accuracy		±0.25% f.s.**						
Reference temperature		20°C						
Nominal temperature range		–10°C to +50°C						
Working temperature range		–30°C to +80°C						
Temperature coefficient of gain		< 0,1% f.s.**/10 K						
Temperature coefficient of zero		< 0,2% f.s.**/10 K						
Nominal deflection		< 0.1 mm						
Degree of protection		IP 67						

* The sum of the dynamic and static load is decisive
** f.s. = full scale value

Dimensions

in mm

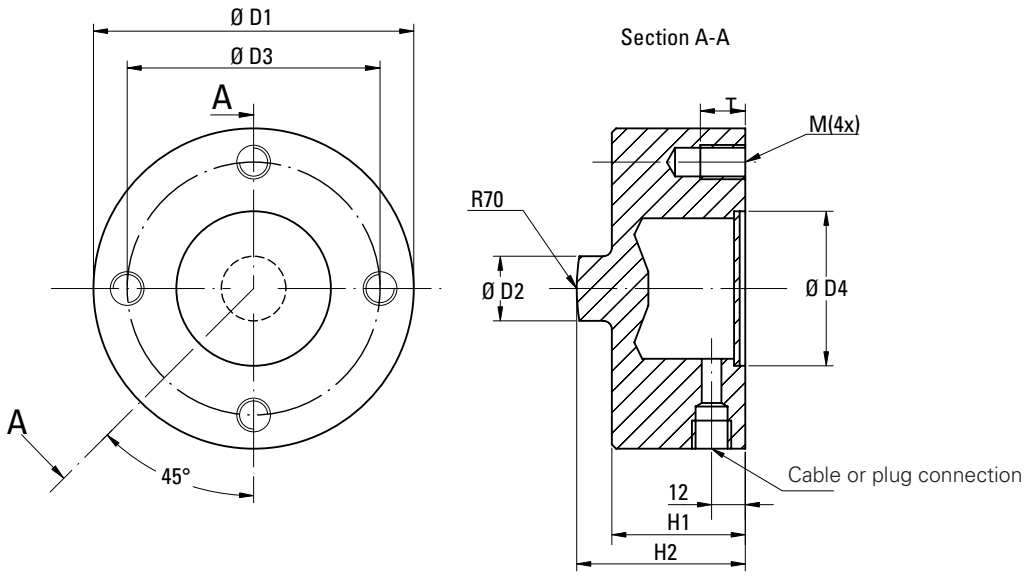

Output variants without measuring amplifiers / with integrated measuring amplifiers

Version	Without measuring amplifier*		Measuring amplifier with current output				Measuring amplifier with voltage output				Measuring amplifier with RS 485 interface	
			3-conductor		2-conductor							
Output signal Sig	≈ 2 mV/V		1…9 mA 4…20 mA		4…20 mA		0…5 V		0…10 V		0...32767 digits	
Supply U_b [V]	< 10		10…30		10…30		6…30		11…30		6...30	
Resolution [bit]	–		11				11				14	
Measuring rate	–		1000 (optional 30….2000) Hz									
Insulation resistance	> 1 GΩ		> 1 GΩ									
Load	–		< (U_b – 6V) / Sig_{max}		< (U_b – 8V) / Sig_{max}		> 10 000 Ω				–	
Max. power consumption	40 mA		40 mA									
Electrical protection	Reverse voltage, overvoltage and short circuit protection						Reverse voltage and overvoltage protection				Reverse voltage, overvoltage and short circuit protection	
Cable type	FDCP plus, 4 x 0.25 mm², length 5 m, weight 9.1 kg		Ölflex classic YSLY-JZ, 4 x 1.5 mm², length 25 m, weight 2.4 kg									
Connection variants	Cable	M 12 x 1 4-pole	Cable	M 12 x 1 5-pole	Cable	M 12 x 1 5-pole	Cable	M 12 x 1 5-pole	Cable	M 12 x 1 5-pole	Cable	M 12 x 1 4-pole
U_b	BN	1	BN	1	BN	1	BN	1	BN	1	BN	1
$Sig_{(+)}$	GN	4	GN	4	BN	1	GN	4	GN	4		
GND	WH	3	WH	3	WH	3	WH	3	WH	3	WH	3
Sig_-	YE	2										
A											YE	4
B											GN	2
Shield	BK	Housing	BK	Housing	BK	Housing	BK	Housing	BK	Housing	BK	Housing
not connected				2; 5		2; 4; 5		2;5		2;5		
Pole assignment	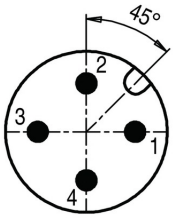		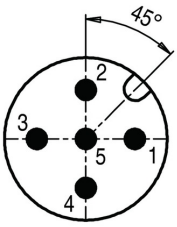								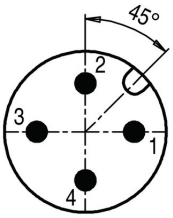	

* Input bridge resistor ≈ 400 Ω | Output bridge resistor ≈ 350 Ω

Optionen

- Output available with test signal on request
- Integrated measuring amplifier
  - with ratiometric voltage input
  - with 2 switching outputs
- Accuracy ±0.1 % f.s.
- Stainless steel housing

Inverted installation

Base plate

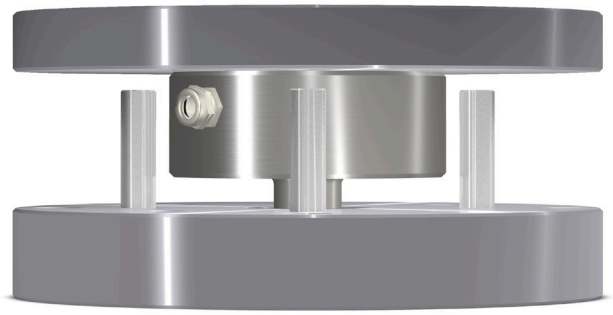

Load transmission plate with compression plate

Accessories

» Base plate
» Load transmission plate with compression plate