SCHALTBAU
Connect Contact Control

2

Snap-Action Switches

S880 series

Snap-action switches with positive opening operation and self-cleaning contacts

Catalogue D80.en

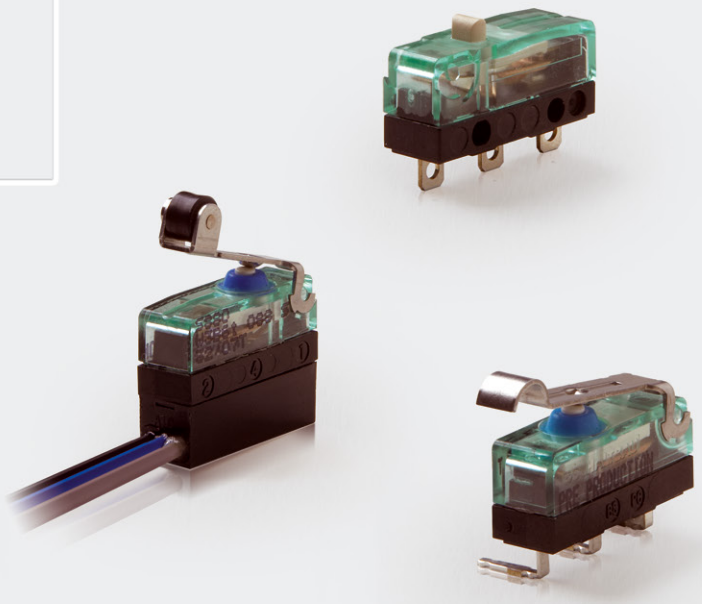

More information
schaltbau.com

Snap-action switches, S880 Series

The world's smallest snap-action switch with self-cleaning contacts and positive opening operation

Schaltbau subminiature S880 snap-action switches feature self-cleaning contacts and a positive opening function.

Minimum size in combination with maximum reliability make the V4 snap-action switch ideally suited for a host of applications: as a safety limit switch in medical engineering, as a limit switch for machine, door and system control or in driver's desks of locomotives.

Risks resulting from contact welding or spring failure are reduced by the positive opening operation of the switch. Thanks to its snap mechanism it is highly resistant to shock and vibration.

Self-cleaning contacts (silver) and IP60/IP67 protection against dust, humidity and pollutants all contribute to the high reliability of the switch, even at low currents.

The switch is operated by a standard push button, but plain levers, roller levers and simulated roller levers are also available as auxiliary actuators.

Features

Series S880

Precision switch: High switching accuracy and high resistance to shock and vibration.

Positive opening operation: Reliable breaking of the normally closed (NC) circuit even if the contacts have become welded together, in compliance with IEC 60947-5-1, Annex K.

Miniature design: V4 subminiature switch, dimensions to DIN 41636, type B.

Sealed to: IP40, IP60 or IP67 in accordance with IEC 60529

Wiping contacts: Continuous low contact resistance ensures high contact reliability over the entire design life of the switch.

Contact finish: Silver or gold

Switch design and function

Series S880

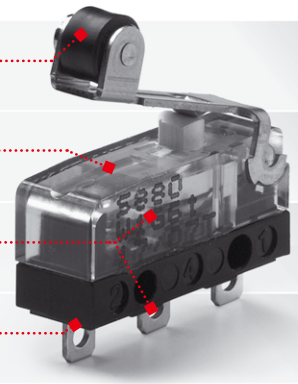

- **Actuator**
  - Standard: pushbutton
  - Aux. actuator: plain lever, roller, simulated roller
- **Contact area**
  - Positive opening operation
  - Self-cleaning contacts
  - Contact material: silver / gold
- **Degree of protection**
  - Contacts: IP40 / IP60 / IP67
  - Terminals: IP00 / IP67
- **Terminals**
  - Solder
  - PCB (straight / angled)
  - Leads

Competence

The success of a product is owed to its quality

The Schaltbau product line is clearly defined and keeps up with the technological requirements of today's markets. Behind every individual snap-action switch you will find decades of experience in engineering and manufacturing.

Snap-action switches are designed with a snap mechanism that allows extremely fast switching, practically regardless of the duration of actuation. This reproduces the operating position precisely, and controls the arc more efficiently.

In Schaltbau's snap-action switches the safety function can be seen – with their transparent-green housing, they are known all over the world.

Applications

Series S880

The S880 is suitable for all safety-related applications, such as:

- Safety limit switch in medical engineering
- Limit switch for machine and system control, product engineering, elevator technology and material handling
- Safety limit switch in access locking systems, door and barrier control
- Control switch in heating, ventilating, and air-conditioning systems
- Switches for driver's cab of rail vehicles, control panels in cranes and on the bridges of ships.

SCHALTBAU
Connect Contact Control

Ordering code

Example: **S880 W1G6a Z**

Series

S880	Series

Contact configuration

W	SPDT

Degree of protection

	Contacts	Terminals
1	IP40	IP00
2	IP60	IP00
3	IP67	IP67
5	IP67	IP00

Terminals

B	Leads, opposite actuator, L = 500 mm
F	PCB terminals, 180°
G	Solder terminals, 180°
H	Leads, on actuator side, L = 500 mm
J	PCB terminals, 90° LH-side
P	PCB terminals, 90° RH-side

Contact finish

4	Gold
6	Silver

Special design, optional

Actuator, rear-mounted	Z
Positioning pin, RH-side	S
Positioning pin, LH-side	T

Actuator

Pushbutton (standard)	a
Plain lever, short	k
Roller lever, long	r
Roller lever, short	t
Simulated roller lever, medium	v

Note:
This product catalogue comprises only stock items. For some variants minimum quantities apply. Please ask for conditions.

Special variants:
If you need a special variant of the switch, please do not hesitate to contact us. Maybe the type of switch you are looking for is among our many special designs. If not, we can also supply customized designs. In this case minimum quantities apply.

Parameter	Code	Version			
Protection contacts /terminals		IP40/00	IP60/00	IP67/00	IP67/67
Actuator					
▶ Pushbutton (standard)	a				
▶ Plain lever	k				
▶ Roller lever	r / t				
▶ Simulated roller lever	v				
Actuator, rear-mounted	Z				
▶ Plain lever	k				
▶ Roller lever	r / t				
▶ Simulated roller lever	v				
▶ **Series** ▶ **Contact configuration** ▶ **Contact finish**	S880 w 4 / 6				
Terminals					
▶ Leads opposite actuator, length 500 mm	B	---			
▶ PCB terminals, 180°	F			---	
▶ Solder terminals, 180°	G			---	
▶ Leads on actuator side, length 500 mm	H	---			
▶ PCB terminals 90° LH-side	J			---	
▶ PCB terminals 90° RH-side	P			---	

SCHALTBAU

Series S880

S880 W1G6a
Version IP40/00 with pushbutton (standard) and solder terminals 180°

S880 W1F6k
Version IP40/00 with short plain lever and PCB terminals 180°

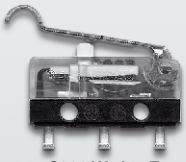

S880 W1J6v Z
Version IP40/00 with simulated roller lever, PCB terminals 90° LH-side

S880 W2G6a
Version IP60/00 with push button (standard) and solder terminals 180°

S880 W2G6k
Version IP60/00 with short plain lever and solder terminals 180°

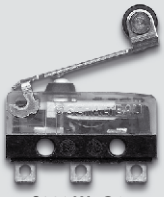

S880 W5G6r
Version IP67/00 with long roller lever and solder terminals 180°

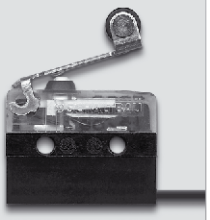

S880 W3B6t
Version IP67/67 with short roller lever and leads opposite actuator

Specifications

Series S880

Series Version	Standard	S880 IP40/00	S880 IP60/00, IP67/00, IP67/67
Contact configuration	IEC 60947	1 Form C SPDT, single break Contact element with 3 terminals	
Conventional thermal current I_{th}	IEC 60947	6 A at T = 85° C	
	UL 508	6 A at T = 85° C	
Rated insulation voltage U_i	IEC 60947	IP40/00: 250 V at PD2 or 125 V at PD3	IP60/00: 250 V at PD2 *1 IP67/xx: 250 V at PD3 *1
	UL 508	300 V	300 V
Pollution degree	IEC 60947	PD2 or PD3	
	UL 508	PD3	
Rated impulse withstand voltage U_{imp}	IEC 60947	2.5 kV	
Overvoltage category	IEC 60947	OV2	
Utilization category for silver contacts *2	IEC 60947	AC-15, 230 V AC / 1.0 A	DC-13, 60 V DC / 0.5 A
	UL 508 *3	AC 240 V / 1.0 A	DC 60 V / 0.5 A
Contact gap, typ.	IEC 60947	1.1 mm	
Contact force, typ.	IEC 60947	0.2 N	
Contact resistance, typ., without leads connected	IEC 60947	100 mΩ	
Positive opening force *4	IEC 60947	21 N	
Actuator travel for positive opening operation	IEC 60947	see pages 6, 7	
Maximum actuator travel *4	IEC 60947	1.95 mm	
Actuation speed	IEC 60947	1.0 m/s max. 0.5 mm/s min.	
Vibration resistance, 10 … 500 Hz all directions (without aux. actuator at 0.1 ms max. opening time)	IEC 60068-2-6	50 g	
Shock resistance (without aux. actuator at 0.1 ms max. opening time)	IEC 60068-2-27	50 g, half sinus	
Short-circuit protection for silver contacts *2	IEC 60269-2	2 A gG	
Maximum operating frequency	IEC 60947	200 cycles/minute	
Actuation force *4	IEC 60947	2 N max.	
Release force *4	IEC 60947	0.15 N min.	
Degree of protection			
Contacts	IEC 60529	IP40 / IP60	IP67
Terminals Solder	IEC 60529	IP00	IP00
PCB	IEC 60529	IP00	IP00
Leads	IEC 60529	---	IP67
Mechanical endurance	IEC 60947	1.5 million cycles min.	1.5 million cycles min.
Temperature range	IEC 60947	-40 °C … +85 °C	-25 °C … +85 °C
Material			
Contacts	---	Silver ($Ag/AgSnO_2$) or Gold (AuNi3Ag26)	
Terminals	---	Brass, silver or gold plated	
Seal	---	Silicon, blue	
Housing upper part	---	PC, green, transparent	
Housing lower part	---	PC, black	
Leads	UL/CSA	PVC insulated leads AWG 24	
Mounting position	---	Any	
Weight, without leads connected	---	approx. 1.5 g	
Approvals	---		

SCHALTBAU

*1 Observe safety instructions p. 11 *2 Data for gold contacts upon request
*3 General Purpose *4 Measured next to push button

Notes:

Data valid for new switches under laboratory conditions and at room temperature, unless otherwise mentioned.

Dimension diagram, circuit diagram

Series S880

- **Dimension diagram S880 W1G6a**

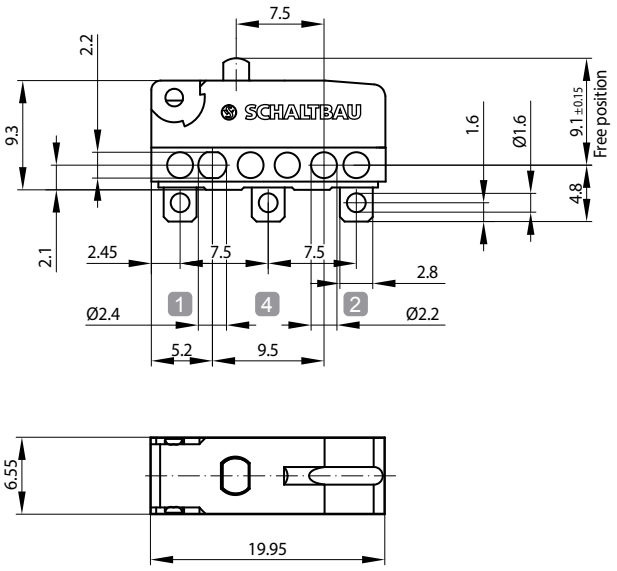

Circuit diagram

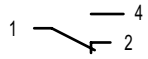

S880 W1G6a

S880 W1G6a	SPDT
S880 W1G6a	Contacts IP40 Terminals IP00
S880 W1G6a	Solder terminals
S880 W1G6a	Contact finish: silver
S880 W1G6a	Push button (standard)

- **Dimension diagram S880 W2G6a / S880 W5G6a**

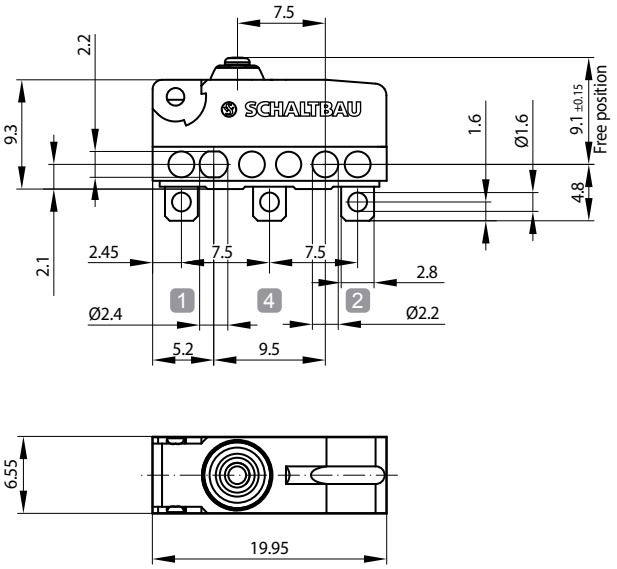

Circuit diagram

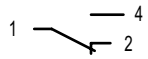

S880 W2G6a

S880 W2G6a	SPDT
S880 W2G6a	Contacts IP60 Terminals IP00
S880 W2G6a	Solder terminals
S880 W2G6a	Contact finish: silver
S880 W2G6a	Push button (standard)

S880 W5G6a

S880 W5G6a	SPDT
S880 W5G6a	Contacts IP67 Terminals IP00
S880 W2G6a	Solder terminals
S880 W2G6a	Contact finish: silver
S880 W2G6a	Push button (standard)

- **Dimension diagram S880 W3B6a**

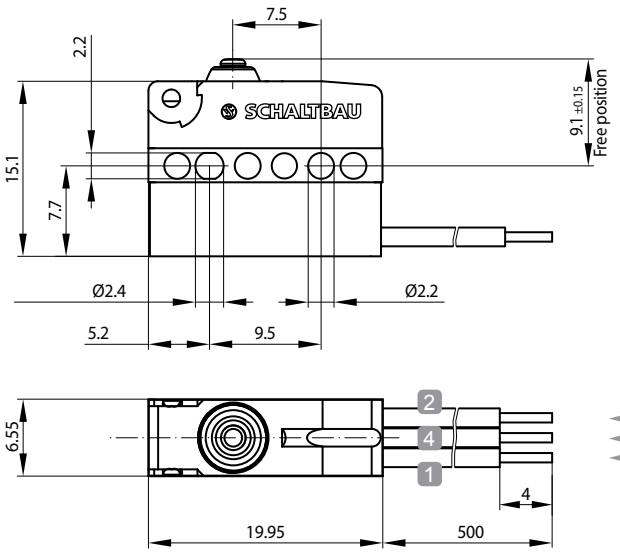

Circuit diagram

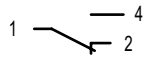

Colour of leads:
grey
blue
black

S880 W3B6a

S880 W3B6a	SPDT
S880 W3B6a	Contacts IP67 Terminals IP67
S880 W3B6a	Leads opposite actuator, 500 mm
S880 W3B6a	Contact finish: silver
S880 W3B6a	Push button (standard)

Specifications are subject to alteration without prior notice / Dimensions in mm

Actuator options, actuator positions

Series S880

- **Dimensions S880 WxXx a** Pushbutton (standard)

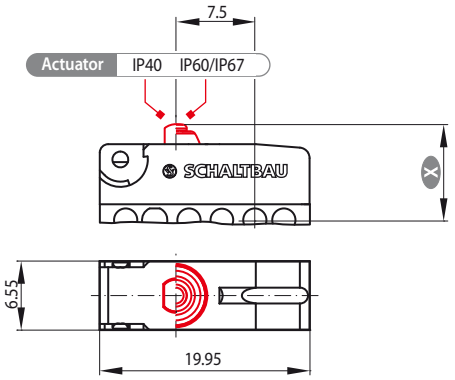

Actuator position	Pushbutton (standard) a Actuator travel X in mm
Free position	9.10 ± 0.15
Operating position	8.40 ± 0.20
Release position	8.55 ± 0.20
Total positive opening travel	7.35
Total travel position	7.15
Movement differential *(between operating and release position)*	0.15 *(typical)*

Note: *To ensure the proper working of the positive opening operation it is necessary to depress the plunger to the point of total positive opening travel. However, it must not be pushed beyond total travel position.*
Data is valid for new switches.

- **Dimensions S880 WxXx k** Plain lever, short

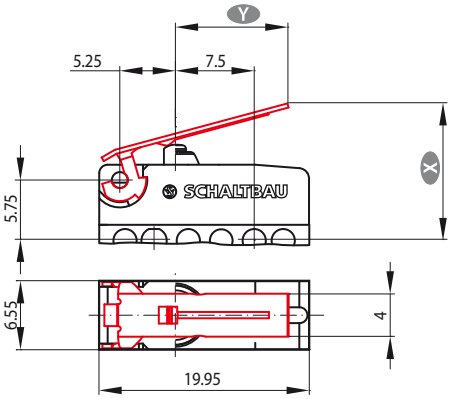

Actuator position	Plain lever k Travel X in mm
Length of lever Y	10.70
Free position	13.70 ± 0.80
Operating position	11.60 ± 0.80
Release position	12.00 ± 0.80
Total positive opening travel	7.50
Total travel position	7.30
Movement differential *(between operating and release position)*	0.40 *(typical)*

Note: *To ensure the proper working of the positive opening operation it is necessary to depress the plunger to the point of total positive opening travel. However, it must not be pushed beyond total travel position.*
Data is valid for new switches.

- **Dimensions S880 WxXx t / S880 WxXx r** Roller lever, short / long

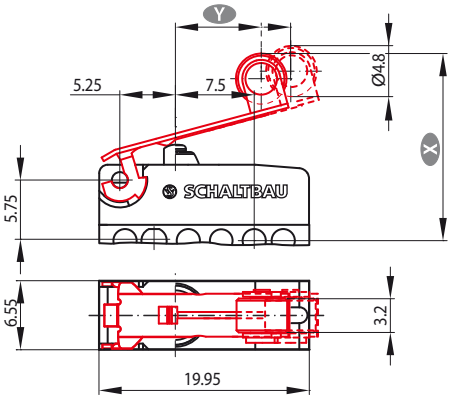

Actuator position	Roller lever t Travel X in mm	Roller lever r Travel X in mm
Length of lever Y	8.25	10.70
Free position	18.30 ± 0.80	19.00 ± 0.80
Operating position	16.50 ± 0.80	16.80 ± 0.80
Release position	16.90 ± 0.80	17.20 ± 0.80
Total positive opening travel	12.75	12.40
Total travel position	12.55	12.20
Movement differential *(between operating and release position)*	0.40 *(typical)*	0.40 *(typical)*

Note: *To ensure the proper working of the positive opening operation it is necessary to depress the plunger to the point of total positive opening travel. However, it must not be pushed beyond total travel position.*
Data is valid for new switches.

- **Dimensions S880 WxXx v** Simulated roller lever

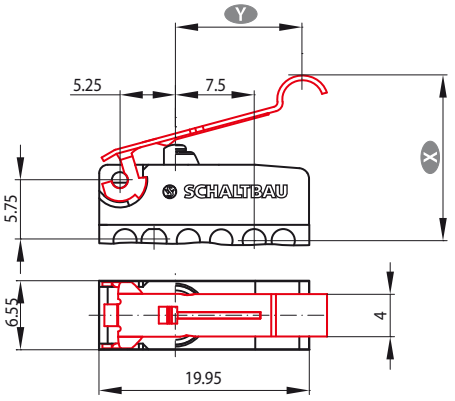

Actuator position	Simulated roller lever v * Actuator travel X in mm
Length of lever Y	12.65
Free position	16.40 ± 0.80
Operating position	14.40 ± 0.80
Release position	14.80 ± 0.80
Total positive opening travel	10.00
Total travel position	9.80
Movement differential *(between operating and release position)*	0.40 *(typical)*

Note: *To ensure the proper working of the positive opening operation it is necessary to depress the plunger to the point of total positive opening travel. However, it must not be pushed beyond total travel position.*
Data is valid for new switches. ** Lever upon request*

Dimensions in mm / Specifications are subject to alteration without prior notice

Rear-mounted actuators, actuator positions

Series S880

- **Dimensions S880 WxXx k Z** Plain lever, short

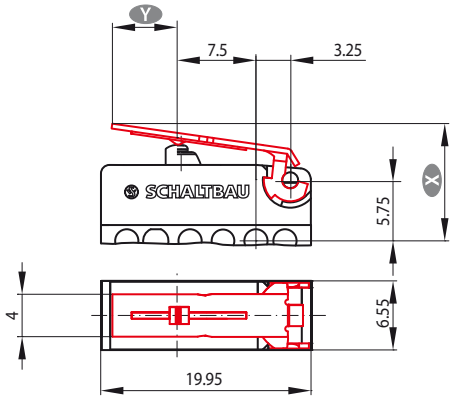

Actuator position (rear-mounted Z)	Plain lever k Travel X in mm
Length of lever Y	6.20
Free position	11.00 ± 0.70
Operating position	9.90 ± 0.70
Release position	10.15 ± 0.70
Total positive opening travel	8.20
Total travel position	7.90
Movement differential *(between operating and release position)*	0.25 *(typical)*

Note: *To ensure the proper working of the positive opening operation it is necessary to depress the plunger to the point of total positive opening travel. However, it must not be pushed beyond total travel position.*
Data is valid for new switches.

- **Dimensions S880 WxXx t Z / S880 WxXx r Z** Roller lever, short / long

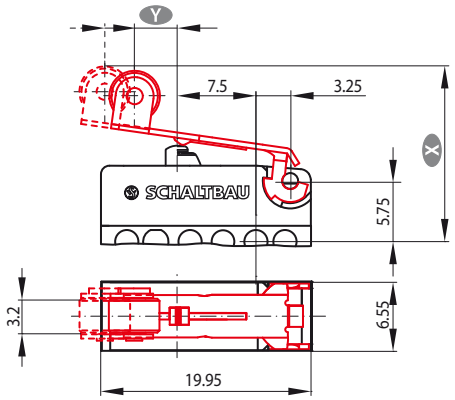

Actuator position (rear-mounted Z)	Roller lever t Travel X in mm	Roller lever r Travel X in mm
Length of lever Y	4.00	6.60
Free position	16.00 ± 0.70	16.30
Operating position	15.00 ± 070	15.15
Release position	15.25 ± 0.70	15.40
Total positive opening travel	13.30	13.40
Total travel position	13.10	13.10
Movement differential *(between operating and release position)*	0.25 *(typical)*	0.25 *(typical)*

Note: *To ensure the proper working of the positive opening operation it is necessary to depress the plunger to the point of total positive opening travel. However, it must not be pushed beyond total travel position.*
Data is valid for new switches.

- **Dimensions S880 WxXx v Z** Simulated roller lever

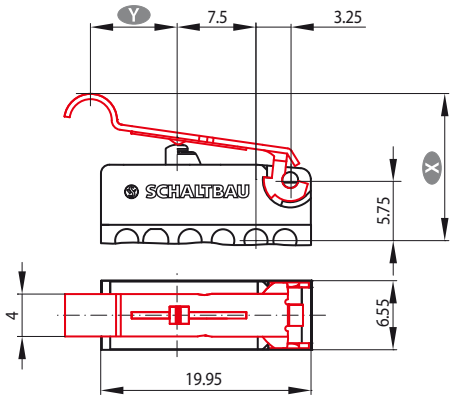

Actuator position (rear-mounted Z)	Simulated roller lever v Actuator travel X in mm
Length of lever Y	8.2
Free position	14.00 ± 0.70
Operating position	12.60 ± 0.70
Release position	12.90 ± 0.70
Total positive opening travel	10.50
Total travel position	10.30
Movement differential *(between operating and release position)*	0.30 *(typical)*

Note: *To ensure the proper working of the positive opening operation it is necessary to depress the plunger to the point of total positive opening travel. However, it must not be pushed beyond total travel position.*
Data is valid for new switches.

Terminals

Series S880

- **Dimensions S880 Wx[B]xx** Leads opposite actuator

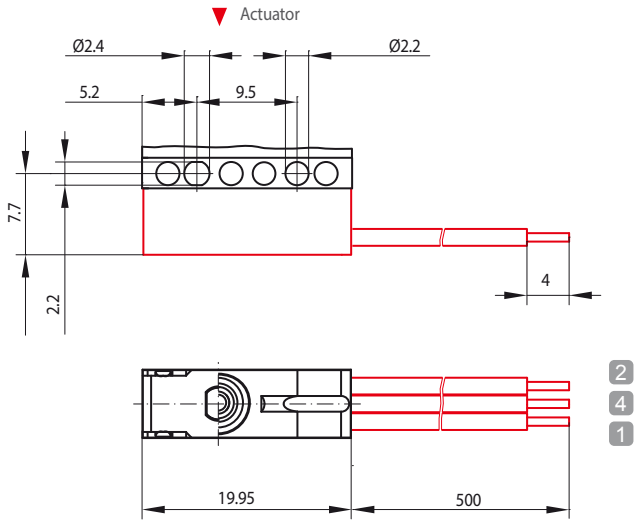

Note:

Terminals: *Leads AWG 24*

Length: *500 mm*

Connection:

Terminal	Colour
2	grey
4	blue
1	black

- **Dimensions S880 Wx[F]xx** PCB terminals, straight

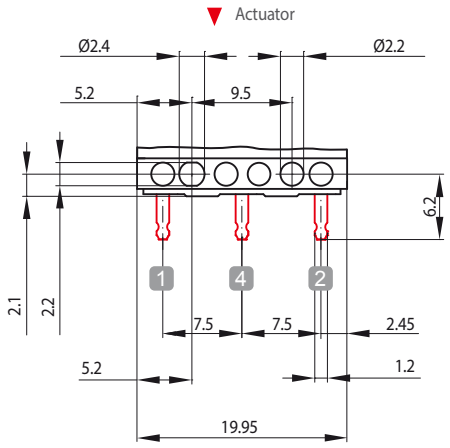

Note:

Hand soldering:

- *Soldering apparatus: Hand-held soldering iron*
- *Solder: Flux-filled solder wire, leadfree*
- *Temperature/duration: 350 °C; 3 s * max.*

Selective soldering:

- *Soldering apparatus : Selective soldering station*
- *Solder: Leadfree solder for selective and wave soldering*
- *Temperature/duration: 300 °C; 1.5 s; 3 mm wave distance; Flux time 0.2 s*

Wave soldering:

- *Soldering apparatus: Wave soldering station, 1 wave (Wörthmann wave)*
- *Solder: Leadfree solder for selective and wave soldering*
- *Temperature/duration: 261 °C; 3 s; wave width 66 mm; conveyor speed 1.3 m/min; preheating approx. 70 s at 110 ... 130 °C (typical)*

** PCB; 1.6 mm; through-contacted*

- **Dimensions S880 Wx[G]xx** Solder terminals, straight

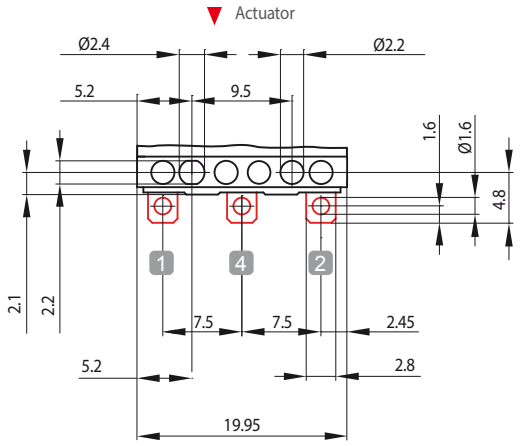

Note:

Hand soldering:

- *Soldering apparatus: Hand-held soldering iron*
- *Solder: Flux-filled solder wire, leadfree*
- *Temperature/duration: 370 °C; 2 s max., leads pre-tinned*

Terminals (continued)

Series S880

- **Dimensions S880 Wx[H]xx** Leads on actuator side

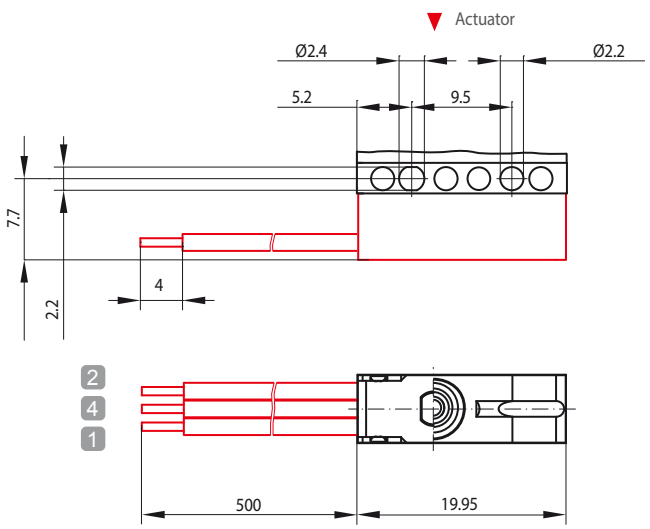

Note:

Terminals: *Leads AWG 24*

Length: *500 mm*

Connection:

Terminal	*Colour*
2	*grey*
4	*blue*
1	*black*

- **Dimensions S880 Wx[J]xx [T]** PCB terminals, 90° LH-side ([J]), with locating pins ([T])

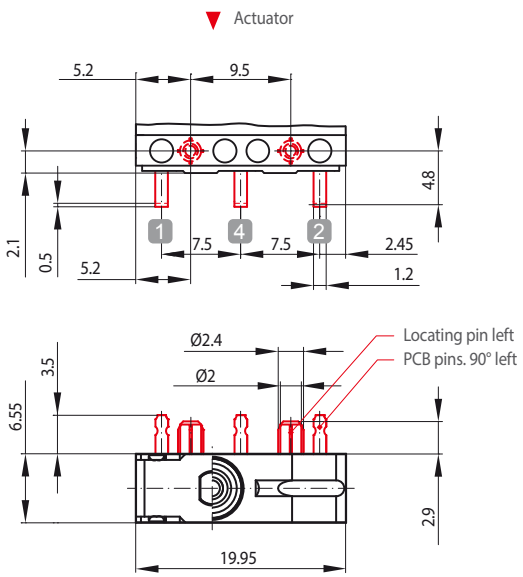

Note:

Hand soldering:

- *Soldering apparatus: Hand-held soldering iron*
- *Solder: Flux-filled solder wire, leadfree*
- *Temperature/duration: 350 °C; 4 s * max.*

Selective soldering:

- *Soldering apparatus : Selective soldering station*
- *Solder: Leadfree solder for selective and wave soldering*
- *Temperature/duration: 300 °C; 1.5 s; 3 mm wave distance; Flux time 0.2 s*

Wave soldering:

- *Soldering apparatus: Wave soldering station, 1 wave (Wörthmann wave)*
- *Solder: Leadfree solder for selective and wave soldering*
- *Temperature/duration: 261 °C; 3 s; wave width 66 mm; conveyor speed 1.3 m/min; pre-heating approx. 70 s at 110 ... 130 °C (typical)*

** PCB; 1.6 mm; through-contacted*

Standards

Series S880

Switch series based on the following standards:

- **IIEC 60947-1:** Low-voltage switchgear and controlgear, Part 1: General rules
- **IEC 60947-5-1, Annex K:** Special requirements for control switches with direct opening action
- **UL508:** Industrial control equipment
- **IEC 60529:** Degrees of protection provided by enclosures (IP Code)
- **UL 94V-0:** Flammability Standard
- Dimensions according to **DIN 41636-3**, type B
- **DIN EN ISO 13849-1:** Safety of machinery – Safety-related parts of control systems – Part 1: General principles for design
- **IEC 60068-2-6:** Environmental testing – Part 2-6: Tests – Test Fc: Vibration (sinusoidal)
- **IEC 60068-2-27:** Environmental testing – Part 2-27: Tests – Test Ea and guidance: Shock

For other applicable standards please refer to the specifications table on page 4.

Mounting Mechanical fastening

Series S880

Ganging (lateral mounting)

- through the two transversal holes in the body of the switch by means of a collar screw or threaded bolt.
  Torque 0.2 Nm max.
- Alternatively, DUO-Clips or retaining rings can be used.

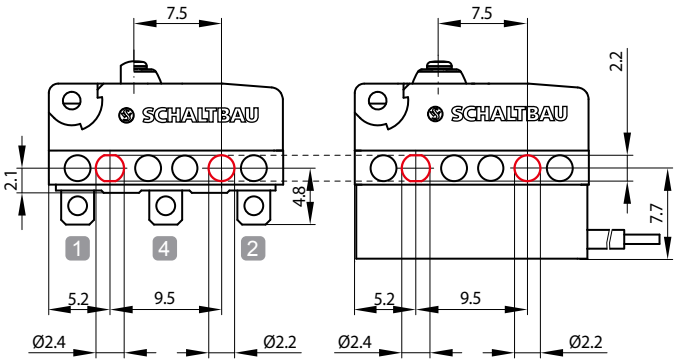

Mounting on PCB

- Mounting holes for PCB terminals, 180°

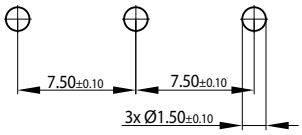

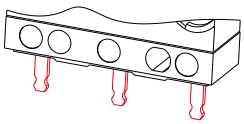

S880 Wx F xxx
PCB terminals 180°

- Mounting holes for PCB terminals, 90° LH-side

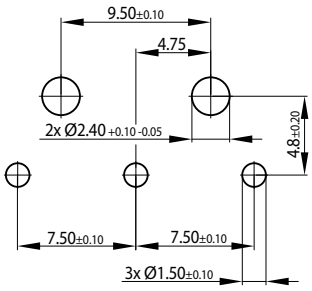

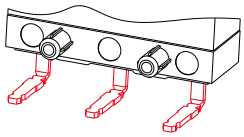

S880 Wx J xxx
PCB terminals 90° with positioning pins

Electrical rating

Series S880

Electrical life is a measure of contact life depending on external conditions such as:

- rated voltage and rated current
- type of load (inductive / capacitive / resistive)
- switching rate (operations/minute)
- arc-extinguishing rate / capacity (especially in DC applications)
- pollution, e.g. dust, harmful substances, noxious gases and vapours

Note:

- *The curve is based on the results of electrical life tests carried out under laboratory conditions. The values shown in the diagram are representative.*
- *We reserve the right for changes which serve the technical progress.*

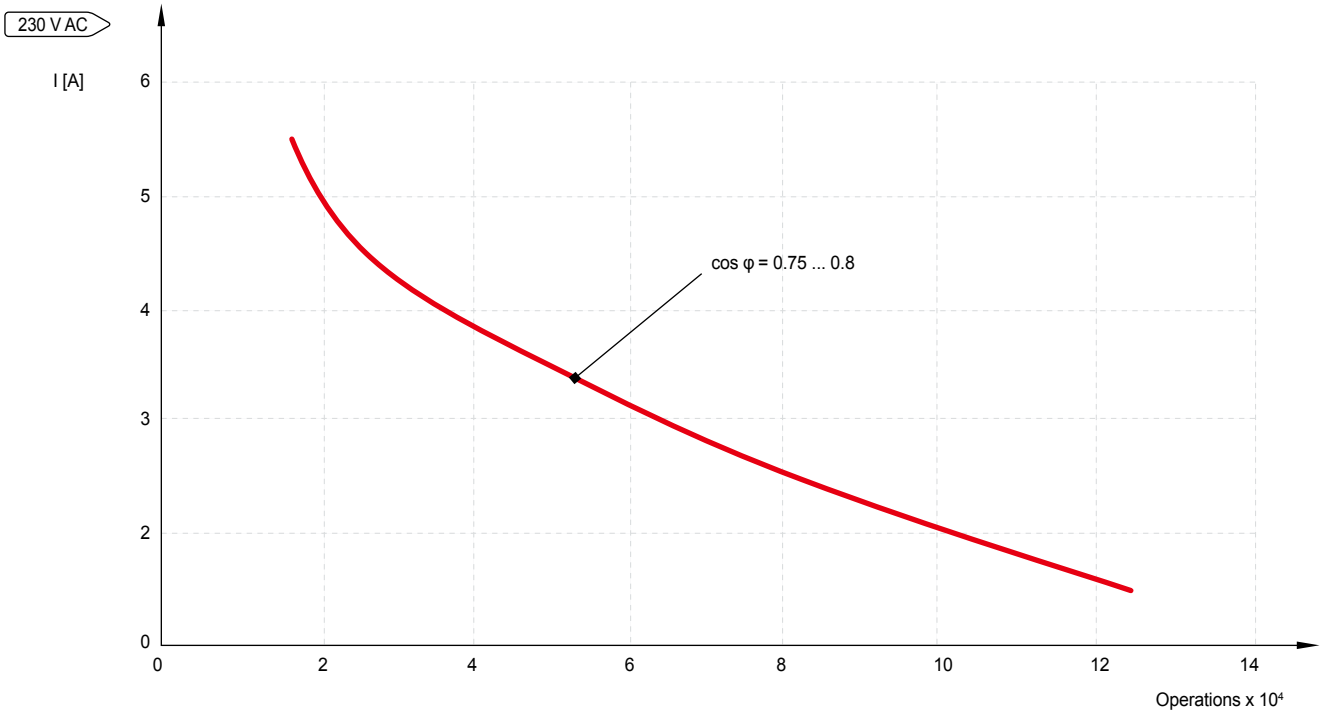

Mounting Use of roller levers

Series S880

When to use a roller lever?

- **Snap-action switches are designed for actuation with and without a roller lever.**
- **A roller lever is required if the direction of actuation deviates more than ±15° from the plunger axis.**

- **Switch with roller lever actuated by trigger cam**

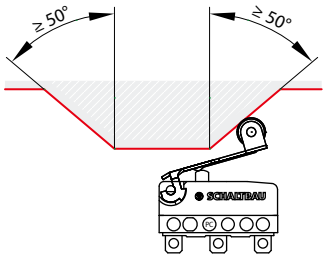

S880 WxXx[t]
Roller lever, short

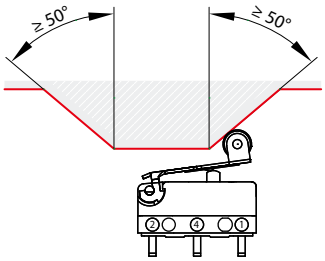

S880 WxXx[t][Z]
Roller lever, short, rear-mounted

- **Switch with roller lever actuated by cam disk**

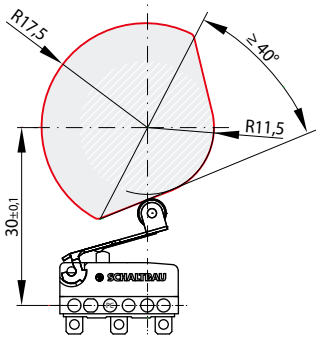

S880 WxXx[t]
Roller lever, short

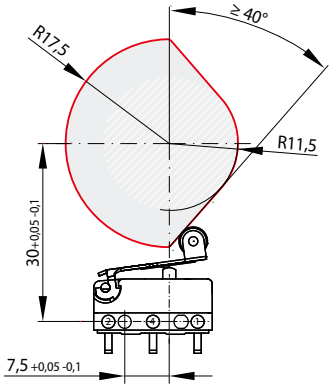

S880 WxXx[t][Z]
Roller lever, short, rear-mounted

Mounting and safety instructions, environmental conditions

Series S880

Mounting instructions:

- Snap-action switches should be mounted by qualified professional staff only.
- Observe the required clearance and creepage distances. This is also applicable for assembled leads.
- It is necessary to use insulating plates when ganging or mounting switches on uninsulated surfaces.
- The switches can be mounted in any orientation.
- When mounting the switches make sure to use 2 fastening elements (e.g. screws).
- Only use adequate fastening elements such as cylinder head or collar screws or DUO-clips, including washers. When fastening make sure not to exceed the maximum tightening torque.
- Avoid tilting the screw when mounting to prevent mechanical tension on the housing.
- The actuator may not be pre-tensioned when in the free position. When actuated, the actuator should travel well beyond the operating position, for at least 50% of the predefined overtravel, all the way to total travel position.
- To ensure the proper function of the positive opening operation it is necessary to depress the plunger to the total travel position.
- To prevent mechanical destruction of the switch, make sure that actuation of the switch does not exceed the specified total travel position. Avoid using the switch as a mechanical end stop..
- High-impact actuation of the switch can have a negative effect on its mechanical life.
- When securing stripped wire ends in the terminal clamp, make sure the wire insulation is flush with the clamp.
- Prevent a transfer of forces to the switch terminals, and ensure that connected leads have a functioning strain relief.

Non-permissible environmental conditions:

- Cleaning agents, adhesives, solvents, or screw-retaining varnish must be compatible with polycarbonate. Never use polycarbonate incompatible chemicals.
- Using chemicals which are not compatible with polycarbonate can result in cracks, deformation, breakage and dissolution of the housing or complete destruction of the switch.
- Switches sealed to IP 67 are immersion protected. That means there is no ingress of water in a harmful quantity when a new switch (which is not operated) is immersed in water (1 m depth) for 30 minutes. This degree of protection cannot be warranted when polycarbonate incompatible chemicals are used.

Safety instructions:

- In case of moisture of any kind or impact of aggressive substances, chemicals, solvents or acids appropriate protective measures must be taken by the user in accordance with IEC 60364-4-41:2005, modified (Low-voltage electrical installations - Part 4-41: Protection for safety - Protection against electric shock). One such measure is the limitation of the voltage range.
- Be sure to make regular visual inspections.
- Improper handling of the switch, e.g. when hitting the floor with some impact, can result in breakage, visible cracks and deformation.
- The switch suitability has to be confirmed by the customer for the specific application, and under application conditions.
- For applications with both a high ambient temperature of >40°C and a high I_{th} current, a correction factor i.a.w. DIN EN 60204-1 Tab. 6 and Table D.1 must be applied for the wire and current.

Defective parts must be replaced immediately!

For a detailed list of all safety instructions see here:
➔ schaltbau.info/download2en!

Schaltbau GmbH

For detailed information on our products and services visit our website – or give us a call!

Schaltbau GmbH
Hollerithstrasse 5
81829 Munich
Germany

Phone +49 89 9 30 05-0
Fax +49 89 9 30 05-350
Internet www.schaltbau.com
e-Mail contact@schaltbau.de

with compliments:

IRIS Certification

The production facilities of Schaltbau GmbH have been IRIS certified since 2008.

Schaltbau GmbH ISO 14001 certified since 2002

Certified to DIN EN ISO 14001 since 2002. For the most recent certificate visit our website.

Schaltbau GmbH ISO 9001 certified since 1994

Certified to DIN EN ISO 9001 since 1994. For the most recent certificate visit our website.

Electrical Components and Systems for Railway Engineering and Industrial Applications

Connectors

- Connectors manufactured to industry standards
- Connectors to suit the special requirements of communications engineering (MIL connectors)
- Charging connectors for battery-powered machines and systems
- Connectors for railway engineering, including UIC connectors
- Special connectors to suit customer requirements

Snap-action switches

- Snap-action switches with positive opening operation
- Snap-action switches with self-cleaning contacts
- Snap-action switch made of robust polyetherimide (PEI)
- Snap-action switch with two galvanically isolated contact bridges
- Special switches to suit customer requirements

Contactors
Emergency disconnect switches

- Single and multi-pole DC contactors
- High-voltage AC/DC contactors
- Contactors for battery powered vehicles and power supplies
- Contactors for railway applications
- Terminal bolts and fuse holders
- DC emergency disconnect switches
- Special contactors to suit customer requirements

Electrics for rolling stock

- Equipment for driver's cab
- Equipment for passenger use
- High-voltage switchgear
- High-voltage heaters
- High-voltage roof equipment
- Equipment for electric brakes
- Design and engineering of train electrics to customer requirements

D1959/2202/0 Printed in Germany